GUARDIAN™7000

Hotplate Stirrers

Durable Hotplate Stirrers with Superior Safety Features and Intelligent Performance

OHAUS Guardian 7000 Hotplate Stirrers are designed with outstanding safety features and superior heating and mixing performance. The SmartHousing™ is chemical resistant with an innovative, easy-to-clean design that channels spills away from internal components and the angled glass control panel. The bright LCD display includes intuitive icons, temperature, speed and time settings - all designed to monitor performance from across the lab.

Unique Features:

- **SmartPresence™ and SmartLink™ Technologies Ensure Supervised Operation**
  Protect your lab with SmartPresence™ and SmartLink™ technologies. These exclusive features automatically shut off the heater if no one is detected after a user set "time out" period has passed.
- **SafetyHeat™ System Protects the Lab**
  An industry-leading early detection system that uses two independent safety controls to continuously monitor the electronics and shut off heating before an overtemperature condition occurs.
- **Powerful, Consistent Stirring Performance**
  Precise stirring from 60 to 1600 rpm is made possible by the design of a powerful motor, strong magnet and software controlled ramp rate, ensuring secure magnetic coupling for viscous applications.
- **Customized Performance for Precise Applications**
  SmartHeat™ allows you to set the maximum temperature of the unit and SmartRate™ enables fast or slow temperature and speed ramp rates. The programming feature allows storage of 5 multi-step programs.

GUARDIAN™ 7000 *Hotplate Stirrers*

SmartHeat™
Safely control and monitor the maximum temperature preventing overheating of sensitive samples.

SmartLink™
If the **Bluetooth® link is broken, the heating function will safely shut off. Ohaus Wireless Dongle Accessory is required.

SmartRate™
Enables to select fast or slow temperature and speed ramp rates for precise sample control.

SafetyHeat™
Industry-leading internal protection system to assure safety in heating applications with dual monitoring of system health.

SmartHousing™
Stays cool to the touch and is chemical-resistant.

SmartPresence™
Exclusive proximity sensor technology recognizes nearby users and safely turns off heating function if none are detected.

Model	e-G71HS07C	e-G71HS10C	e-G71HSRDM
Function	Heating and Stirring		
Top Plate Size	17.8 x 17.8 cm	25.4 x 25.4 cm	13.5 cm diameter
Speed Range	60 rpm to 1600 rpm		
Speed Stability	+/- 2 %		
Temperature Range	Ambient + 5 °C – 500 °C		Ambient + 5 °C – 380 °C
Temperature Stability*	+/- 1 % Plate, below 100 °C +/-1 °C and +/- 0.5 % Probe, below 100 °C +/-1 °C		
Temperature Accuracy*	Plate +/- 5 °C (after Single Point Calibration) and Probe +/- 0.5 °C (after Single Point Calibration)		
Temperature Calibration	Five Plate and Five Probe		
Timer	1 minute to 99 hours and 59 minutes		
Control	Digital		
Display	Custom Backlit LCD		
Communication	USB		
Capacity	15 L	18 L	20 L
Top Plate Material	Ceramic		Aluminum
Dimensions (H x L x W)	12.2 x 30.9 x 22.3 cm	12.2 x 41.5 x 28.6 cm	12.6 x 26.7 x 17.3 cm
Net Weight	2.6 kg	5.2 kg	2.6 kg
Power	230V, 6.0A, 50/60Hz	230V, 7A, 50/60Hz	230V, 4.6A, 50/60Hz
Power Consumption	1242W (230V)	1449 (230V)	952 (230V)
Working Environment	5 °C – 40 °C, 80 % RH, non-condensing		
Accessories	Temperature Probe (Included)		

* Conditions permitting. Variations in temperature measurement process, vessel, ambient and sample will impact actual performance.
**The Bluetooth word mark and logos are registered trademarks owned by Bluetooth SIG, Inc. and any use of such marks by OHAUS is under license.

GUARDIAN™ 7000 *Hotplate Stirrers*

Accessories

Item No.	Description	e-G71HS07C	e-G71HS10C	e-G71HSRDM
30500570	Base Plate, 135 mm			●
30500571	Handles for Base Plate			●
30500572	Sectional Block, 12 mm Vials			●
30500573	Sectional Block, 15 mm Vials			●
30500574	Sectional Block, 17 mm Vials			●
30500575	Sectional Block, 21 mm Vials			●
30500576	Sectional Block, 28 mm Vials			●
30500577	Sectional Block, 12 mm Test Tubes			●
30500578	Sectional Block, 16 mm Test Tubes			●
30500579	Sectional Block, 20 mm Test Tubes			●
30500580	Sectional Block, 25 mm Test Tubes			●
30500581	Uni Block, 12 mm Vials			●
30500582	Uni Block, 15 mm Vials			●
30500583	Uni Block, 17 mm Vials			●
30500584	Uni Block, 21 mm Vials			●
30500585	Uni Block, 28 mm Vials			●
30500586	Uni Block, 12 mm Test Tubes			●
30500587	Uni Block, 16 mm Test Tubes			●
30500588	Uni Block, 20 mm Test Tubes			●
30500589	Uni Block, 25 mm Test Tubes			●
30392233	Clamp, Specialty, Rod, CLS-RODS			●
30500590	Temperature Probe, 20 cm S/S	●	●	●
30500591	Temperature Probe, 20 cm PTFE	●	●	●
30500592	Temperature Probe, 25 cm S/S	●	●	●
30500593	Temperature Probe, 25 cm PTFE	●	●	●
30500594	In Use Cover Guardian, 17.8 x 17.8 cm	●		
30500595	In Use Cover Guardian, 25.4 x 25.4 cm		●	
30500596	In Use Cover Guardian, Round			●
30500597	Vessel Clamp	●	●	●
30500598	Stir Bar Retriever	●	●	●
30412537	Wireless Dongle MTICWD-200*	●	●	●
30392314	Clamp, Specialty, Column, CLS-COLMNSS	●	●	●
30392315	Clamp, Specialty, Column, CLS-COLMNSM	●	●	●
30392316	Clamp, Specialty, Column, CLS-COLMNSL	●	●	●
30392317	Clamp, Specialty, Column, CLS-COLMNSX	●	●	●
30392318	Clamp, Specialty, Nester, CLS-NESTXS	●	●	●
30400145	Ultra Flex Support Kit	●	●	●
30400146	Support Rod And Clamp Kit	●	●	●
30400147	Spinbar, 2.5 cm PTFE	●	●	●
30400148	Spinbar, 3.8 cm PTFE	●	●	●
30400149	Spinbar, 7 cm PTFE	●	●	●
30400150	Spinbar, 10 cm with Pivot Ring PTFE	●	●	●

*Wireless Dongle accessory required to enable SmartLink™ feature.

GUARDIAN™ 7000 *Hotplate Stirrers*

Outline Dimensions

e-G71HS07C

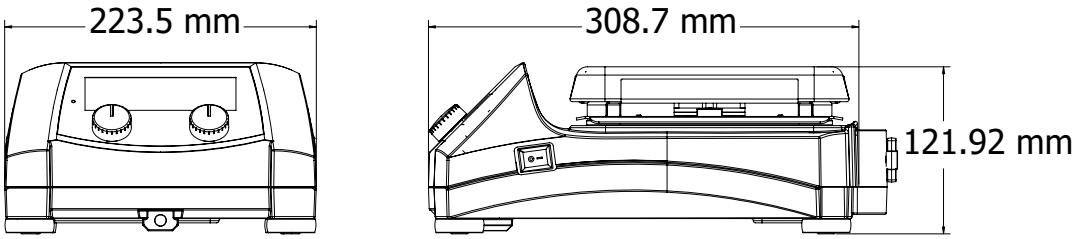

e-G71HS10C

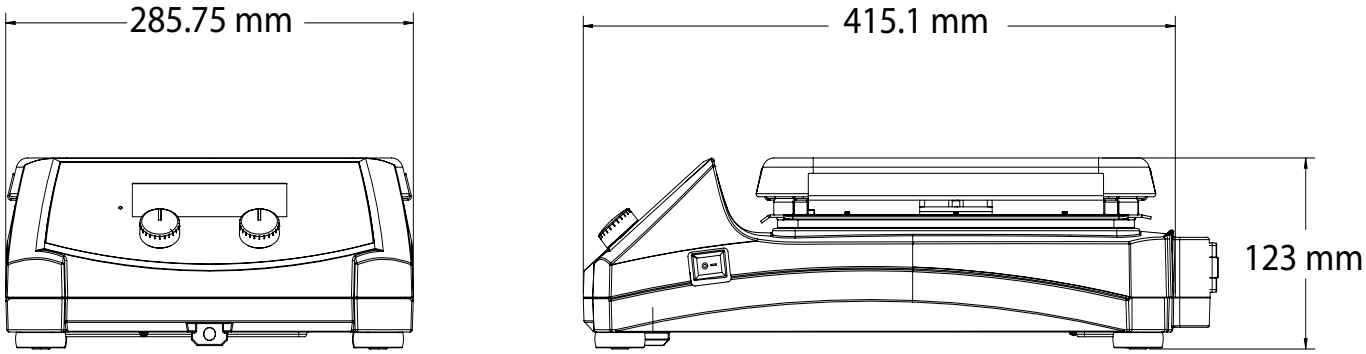

e-G71HSRDM

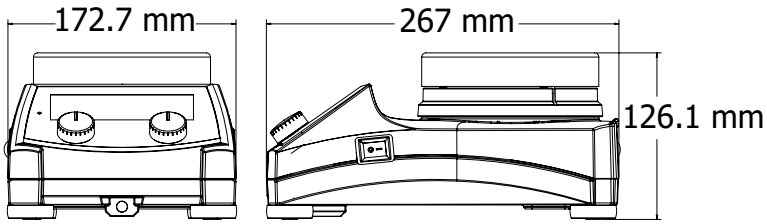

Other Features and Equipment

Icons for SmartRate™, SmartHeat™, SmartPresence™, SmartLink™, green indicator lights when unit is heating and stirring, probe in use, USB port for programming of repeat applications, IP21 Ingress Protection, probe connection, hardened glass front panel, control knobs, On/Off switch for heater disconnect, built-in support rod holder, easy-to-clean ceramic or aluminum tops

Compliance

- **Product Safety:** IEC/EN 61010-1; IEC/EN 61010-2-010; IEC/EN 61010-2-051
- **Electromagnetic Compatibility:** IEC/EN 61326-1 Class A, Basic Environments
- **Compliance Marks:** CE; RCM; TÜV SÜD; WEEE

80776472_G 20250714 © Copyright OHAUS Corporation

OHAUS Europe GmbH

e-mail: ssc@ohaus.com
Tel: 0041 22 567 53 19
e-mail: tsc@ohaus.com
Tel: 0041 22 567 53 20

www.ohaus.com

The management system governing the manufacture of this product is ISO 9001:2015 certified.

OHAUS®